Parts Diagram

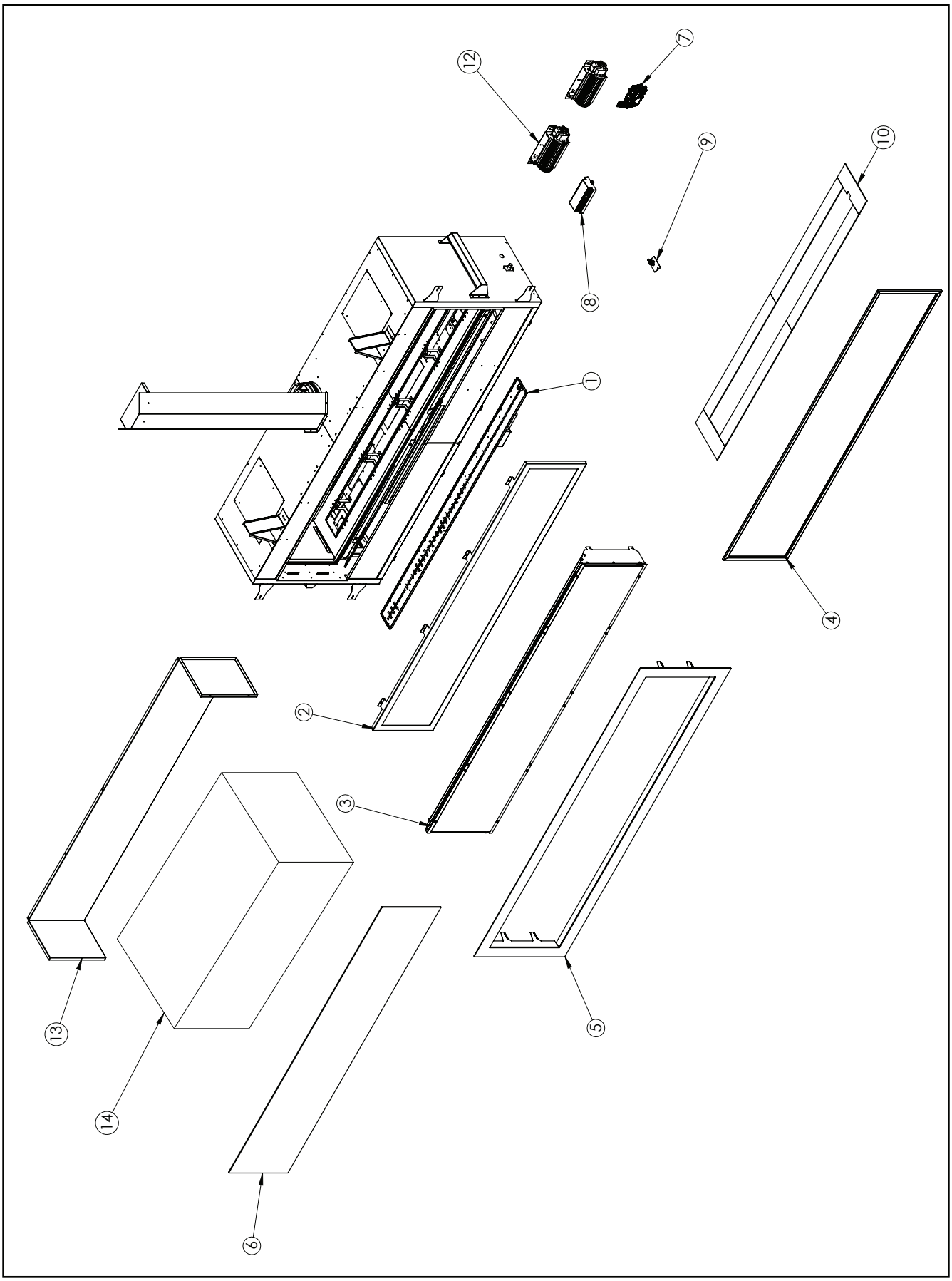

Parts List

Table 9: C72I Parts List

Reference #	Part Description	Part #
1	C72 Pan Burner	50-3696
2	C72 Door Complete	50-3697
3	C72 Safety Screen Complete	50-3699
4	C72 Clear View Screen Only	50-3700
5	C72 Borderview Surround Powder Coated (Grey)	50-3692
5	C72 Borderview Surround Nickel Plated	50-3693
6	C72 Door Glass with Gasket	50-3698
7	S.I.T. 885 Valve w/ NG Stepper Motor	50-2682
8	Proflame 2 IFC (0.584.625)	50-3791
9	PSE Pilot Assembly - Intermittant Pilot	50-3947
10	C72 Glass Bezel	50-3856
12	IPI Dual Convection Fan Kit (240 CFM Combined)	50-3760
-	C72 Fan Only	50-2260
13	C72 Fluted Liners	50-3685
13	C72 Ledgestone Liners	50-3686
13	C72 Porcelain Liners	50-3687
14	C72 Ultra High Definition Driftwood Log Set	50-3691
-	C72 Black Glass Beads	50-3688
-	C72I LP to NG Conversion Kit	50-3695
-	C72I NG to LP Fuel Conversion Kit (Stepper Motor Only)	50-3753
-	C72 VERMICULITE (3 CUPS)	50-3702
-	C72I Owners Manual	50-3703
-	C/G Series Power Vent Kit	50-3666